Pneudom
5x5

seam (erase the marker form the final artwork)
artwork bounds
safe area (erase marker from the final artwork)
visible area

1/4 of the roof

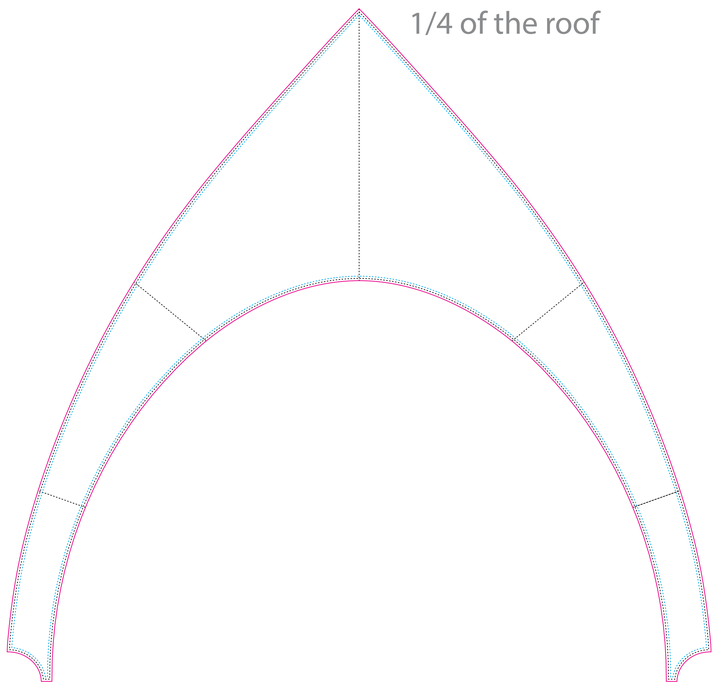

Wall

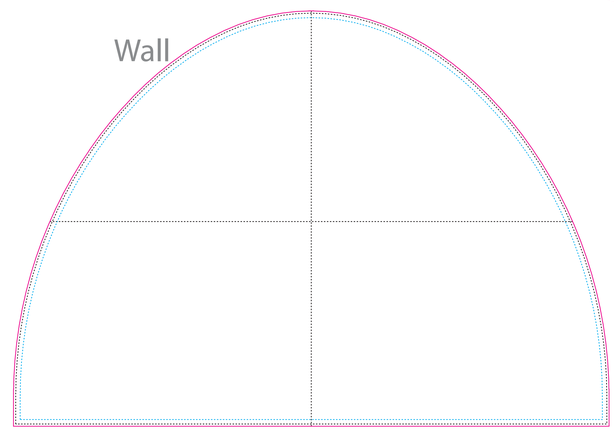

Visor

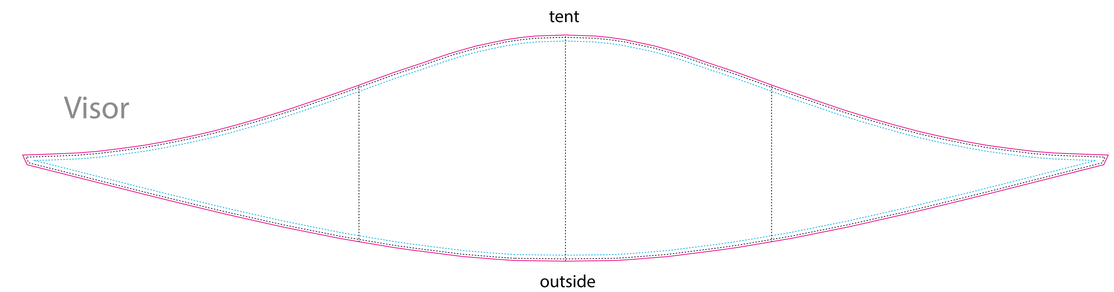

Visor Banner

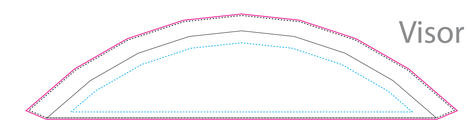

entrance wall

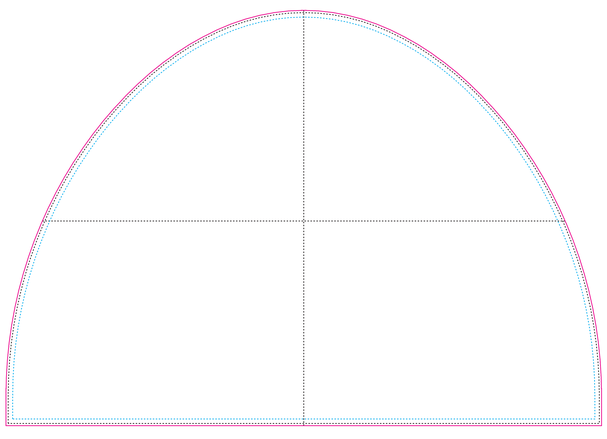

window wall

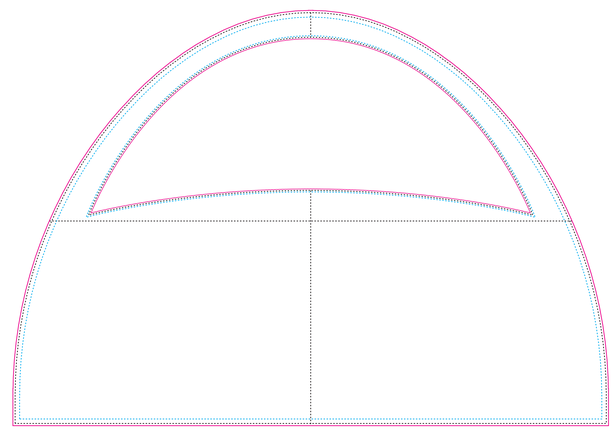
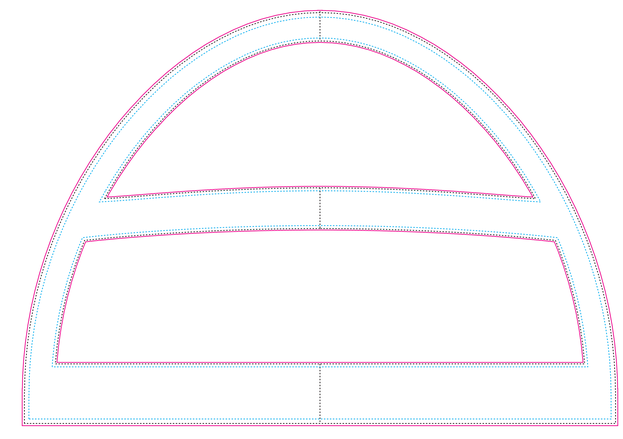
panorama window